Csaplyuk kikönnyítés

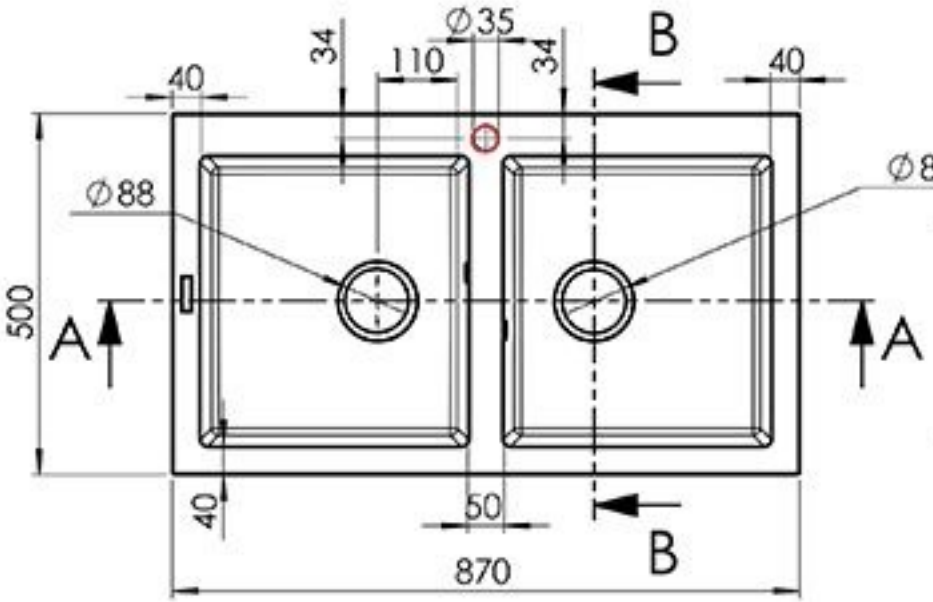

B-B

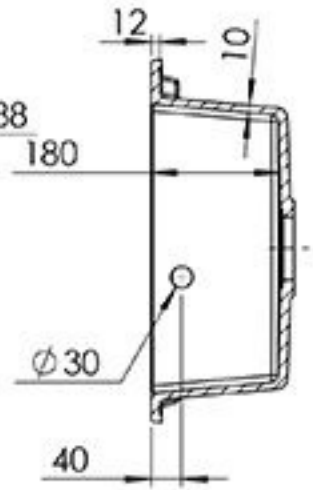

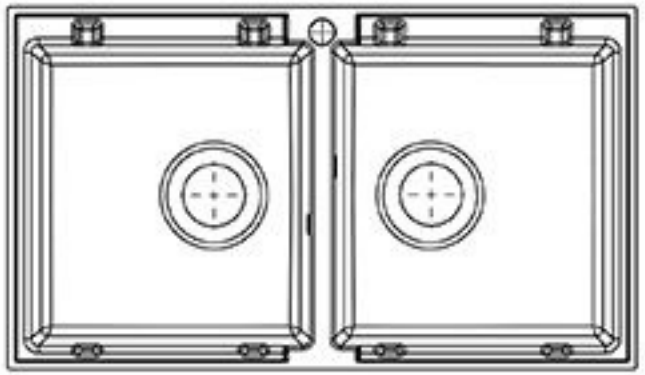

A-A

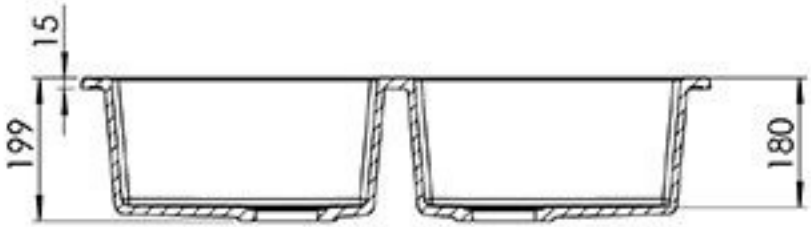

Length tolerance	+3/-3 mm	Design engineer	Date of project	Lenght tolerance (mm) +3/-3 mm	Scale	1:10
Width tolerance	+1,5/-1,5mm	Project ID 05.6		Name	Westeros	
Tap hole positional tolerance	+3/-3 mm			Art. №		
Overflow positional tolerance	+3/-3 mm	LunArt		Dimensions	870/500	
Bend tolerance	+1,5/-1,5mm			Weight tolerance	±3%	Weight 21.6